SHOWTIME
Bookcase & Theater Cabinets

DesignedbyDave's

Bookcase/ Theater Cabinetry with adjustable wood shelves, optional tempered glass doors and slide-out shelves.
Bookcase and Theater Cabinetry is factory direct for quality and value. We make all our home theater furniture. Our lacquer finish on wood is hand rubbed for a visible difference. Our home theater line is a generous twenty-one inches deep. Large enough for big CD jukeboxes, rack components,and server racks.

NKBA™ National Kitchen & Bath Association

TBA

December 24, 2008

SHOWTIME
Bookcase & Theater Cabinets

Contact Information

ORDER BY FAX, MAIL, E-MAIL OR VISIT US

Orders cannot be taken by phone. Feel free to call us for information. (757) 421-3283

Fax Us:

(757) 421-4252

Mail Us:

Dave's Cabinet, Inc.
132 Woodworkers Court
Chesapeake, Virginia 23322

E-mail Us:

sales@davescabinet.com

Visit Us:

Dave's Cabinet, Inc.
132 Woodworkers Court
Chesapeake, Virginia 23322

- Directions from I-64 -

- Take Exit 291-B from I-64.
- Upon leaving ramp, yield all the way to the left lane to get onto the 168 Chesapeake Expressway towards "Nags Head / Manteo".
- Stay on 168 Bypass Expressway for 8.7 miles.
- Take Exit 8-B onto Hillcrest Pkwy. (Last Exit before the Toll)
- Follow exit around and go .7 miles to traffic light.
- Turn right at the light onto Battlefield Blvd.
- Continue on Battlefield Blvd. for 2.8 miles.
- You will see the Dave's Cabinet sign on left, just before the overpass.
- Turn left onto Woodworkers Court.
- Follow to the end.

(757) 421-DAVE (3283)

SHOWTIME
Bookcase & Theater Cabinets

Contents

Sec. 1	Base	p.1
Sec. 2	Base Open	p.1
Sec. 3	Pilasters Filler & Angled Fillers	p.2
Sec. 4	Pilasters End Panels & Angled End Panels	p.3
Sec. 5	Countertops	p.4
Sec. 6	Beaded Bookcase Uppers	p.5
Sec. 7	Beaded Tall Bookcase	p.6
Sec. 8	Decorative Bookcase Uppers	p.7
Sec. 9	Decorative Bookcase Tall	p.8
Sec. 10	Arched Bookcase Uppers	p.9
Sec. 11	Arched Tall Bookcase	p.9
Sec. 12	Raised Panel Header Bookcase Uppers	p.10
Sec. 13	Raised Panel Header Tall Bookcase	p.10
Sec. 14	Quarter Round Bookcase Uppers	p.11
Sec. 15	Quater Round Tall Bookcase	p.11
Sec. 16	Wall Cabinets	p.12
Sec. 17	Mantle Components	p.13 thru 15
Sec. 18	Legged Mantles	p.16
Sec. 17	Options & Accessories	p.17

SHOWTIME
Bookcase & Theater Cabinets

Section 1 - Base

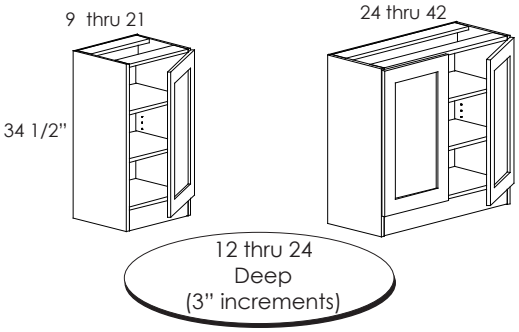

FHD Single & Double Doors

- Specify Left or Right Hinge on single door cabinets. (L/R)
- Specify Finished Ends: Left, Right or Both. (L/R/B)
- To finish toe area POTB is required for all Section 1 cabinets.

Order#
BFH 9 thru 21
(3" increments)

BFH 24 thru 42
(3" increments)

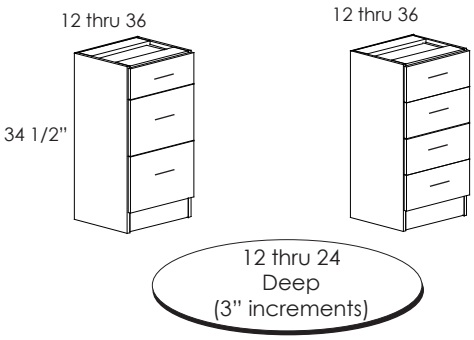

3 & 4 Drawer Cabinets

- To finish toe area POTB is required for all Section 1 cabinets.

Order#
BD3 12 thru 36
(3" increments)

BD4 12 thur 36
(3" increments)

Section 2 - Base Open

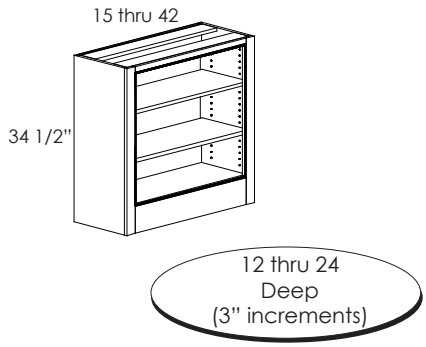

Beaded Base Open

- Open Cabinets are available with optional beaded backs.

Order#
SBO 15 thru 42
(3" increments)

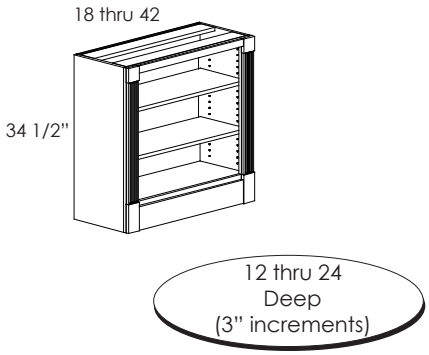

Decorative Base Open

- Open Cabinets are available with optional beaded backs.
- MUST Specify Shaker, Fluted or Reeded Facades; see section 3 for facade options.

Order#
DBO 18 thru 42
(3" increments)

(757) 4 2 1 - D A V E (3283)

Section 3 - Pilasters Fillers & Angled Fillers

Pilasters Filler

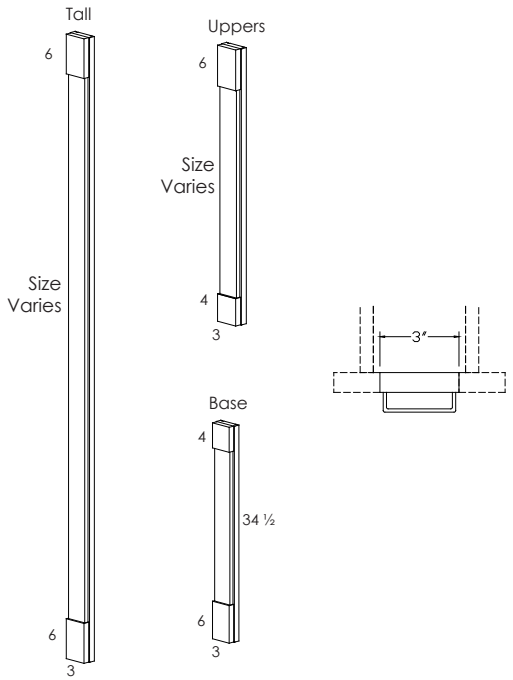

Shaker

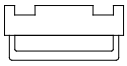

Reeded

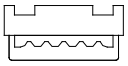

Fluted

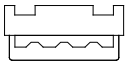

Angled Tempo Filler

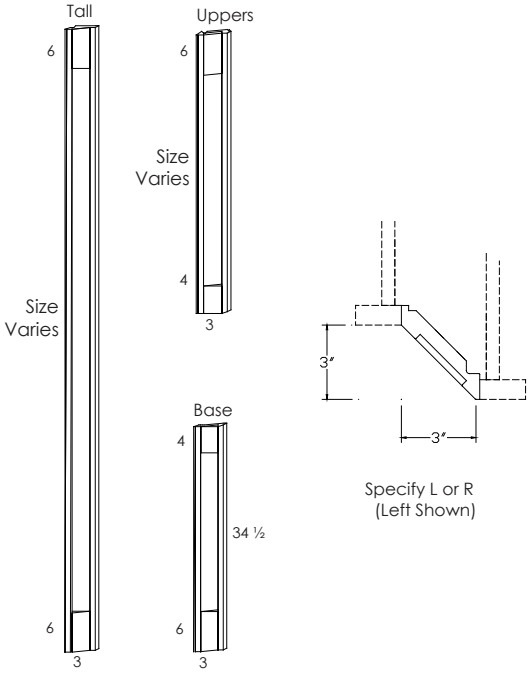

Shaker

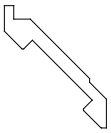

Reeded

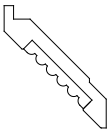

Fluted

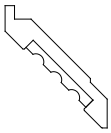

Pilasters Plinths

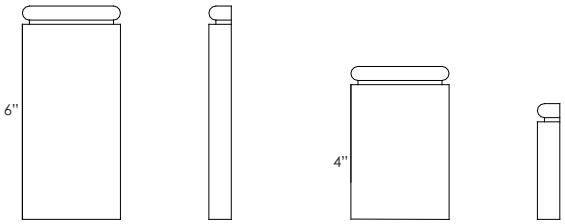

Section 4 - Pilasters Ends Panels & Angled End Panels

Top views are shown left, Specify Left or Right (L/R) when ordering.

Pilaster End Panel (PEP)

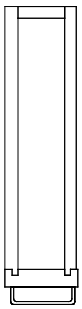

3

See Section 3 for Facade selection.

Angled End Panel (PEP)

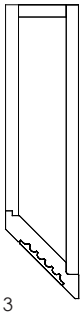

3

Upper

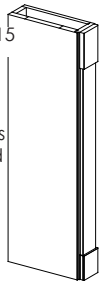

Tall

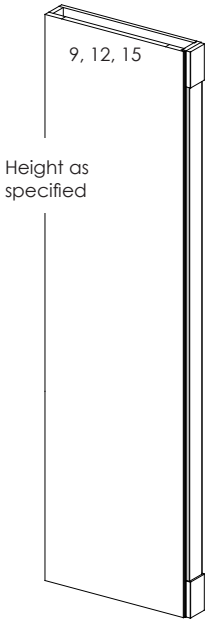

Base

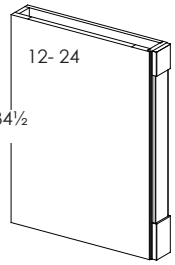

Uppers

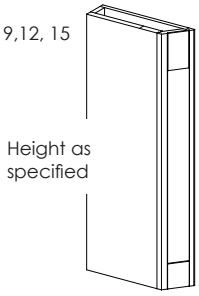

Tall

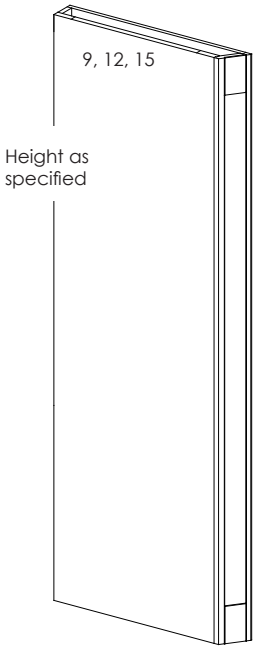

Base

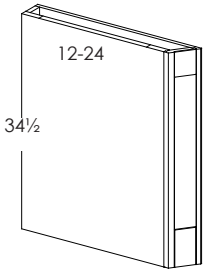

Wood Tops

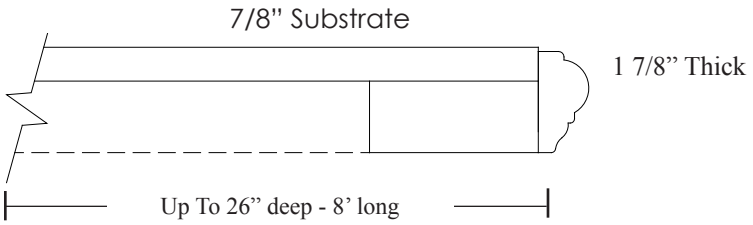

Stone Tops

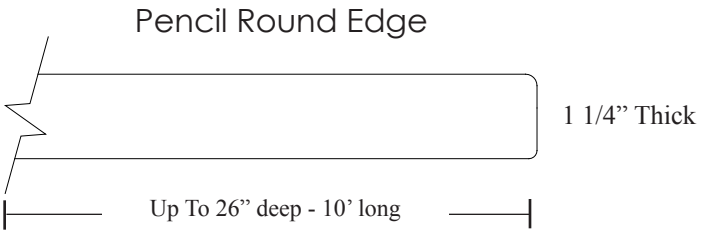

Solid Surface Tops

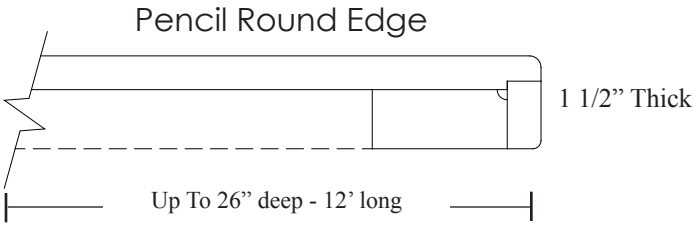

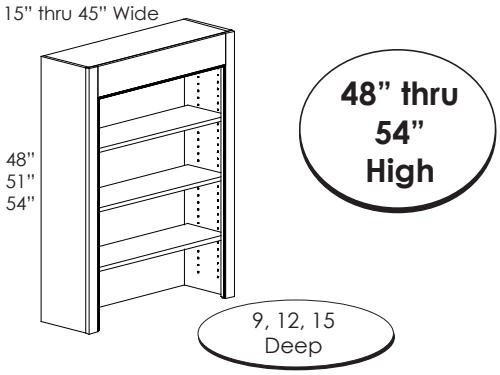

Beaded Single Opening Upper

- 3 Adjustable shelves
- Widths available 15" thru 45" (in 1/2" incements).
- Specify Finished End Panels Left, Right or Both. (L/R/B).

Order#
SOBU48_____
SOBU51_____
SOBU54_____
(Specify Width)

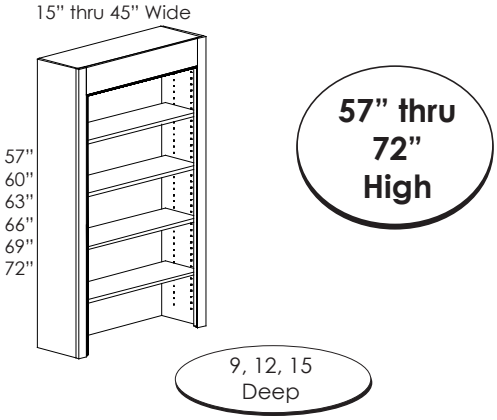

Beaded Single Opening Upper

- 4 Adjustable shelves
- Widths available 15" thru 45" (in 1/2" incements).
- Specify Finished End Panels Left, Right or Both. (L/R/B).
- Equal openings.

Order#
SSOU57_____
SSOU60_____
SSOU63_____
SSOU66_____
SSOU69_____
SSOU72_____
(Specify Width)

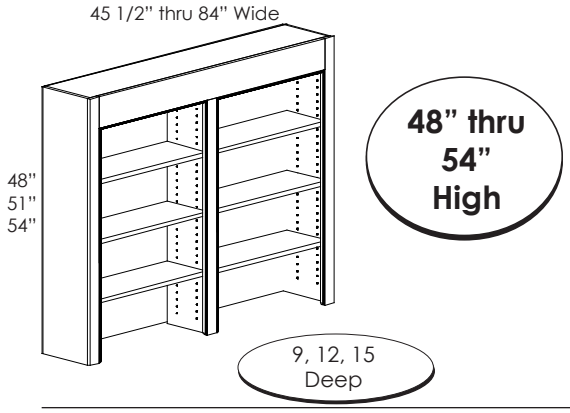

Beaded Double Opening Upper

- 3 Adjustable shelves
- Widths available 45 1/2" thru 72" (in 1/2" incements).
- Specify Finished End Panels Left, Right or Both. (L/R/B).
- Equal openings.

Order#
SDOU48_____
SDOU51_____
SDOU54_____
(Specify Width)

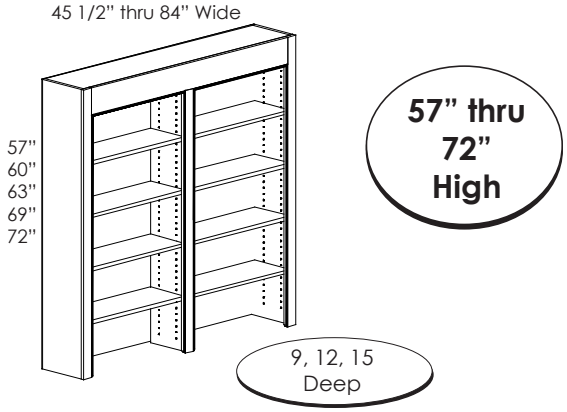

Beaded Double Opening Upper

- 4 Adjustable shelves
- Widths available 45 1/2" thru 72" (in 1/2" incements).
- Specify Finished End Panels Left, Right or Both. (L/R/B).

Order#
SDOU57_____
SDOU60_____
SDOU63_____
SDOU66_____
SDOU69_____
SDOU72_____
(Specify Width)

(757) 421-DAVE (3283)

Tall

15" thru 45" Wide

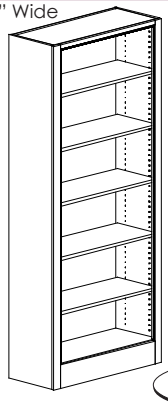

84"
87"
90"

84" thru 90" High

9, 12, 15 Deep

Beaded Tall Bookcase

- 5 Adjustable shelves
- Widths available 15" thru 45" (in 1/2" incements).
- Specify Finished End Panels Left, Right or Both. (L/R/B).

Order#
STB84_____
STB87_____
STB90_____
(Specify Width)

15" thru 45" Wide

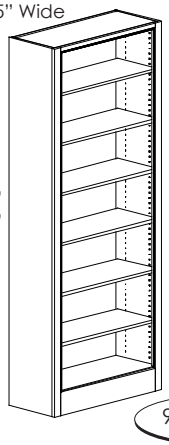

93"
96"

93" thru 96" High

9, 12, 15 Deep

Beaded Tall Bookcase

- 6 Adjustable shelves
- Widths available 15" thru 45" (in 1/2" incements).
- Specify Finished End Panels Left, Right or Both. (L/R/B).

Order#
STB93_____
STB96_____
(Specify Width)

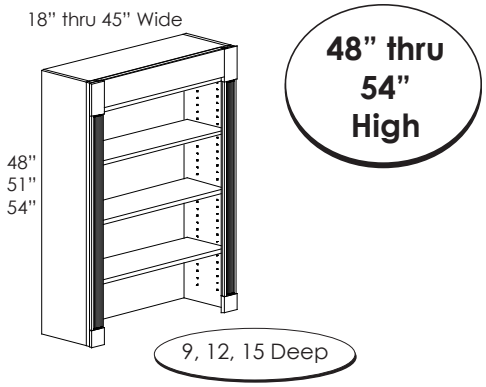

Decorative Single Opening Upper

- 3 Adjustable shelves
- Widths available 18" thru 45" (in 1/2" incements).
- MUST Specify Shaker, Fluted or Reeded Facades; see section 3 for facade options.
- Specify Finished End Panels Left, Right or Both. (L/R/B).

Order#
DSOU48_____
DSOU51_____
DSOU54_____
(Specify Width)

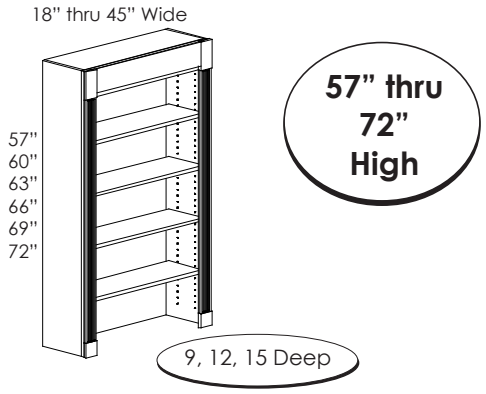

Decorative Single Opening Upper

- 4 Adjustable shelves
- Widths available 18" thru 45" (in 1/2" incements).
- MUST Specify Shaker, Fluted or Reeded Facades; see section 3 for facade options.
- Specify Finished End Panels Left, Right or Both. (L/R/B).

Order#
DSOU57_____
DSOU60_____
DSOU63_____
DSOU66_____
DSOU69_____
DSOU72_____
(Specify Width)

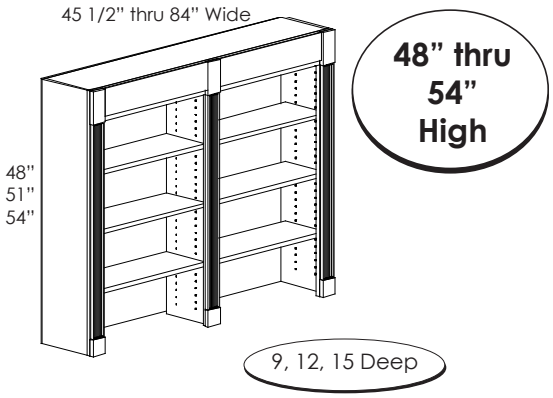

Decorative Double Opening Upper

- 3 Adjustable shelves
- Widths available 45 1/2" thru 72" (in 1/2" incements).
- MUST Specify Shaker, Fluted or Reeded Facades; see section 3 for facade options.
- Specify Finished End Panels Left, Right or Both. (L/R/B).
- Equal openings.

Order#
DDU48_____
DDU51_____
DDU54_____
(Specify Width)

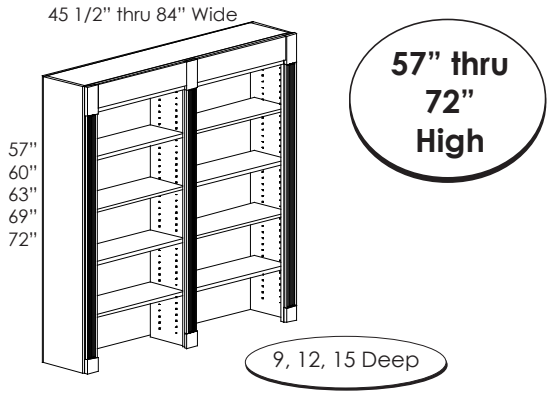

Decorative Double Opening Upper

- 4 Adjustable shelves
- Widths available 45 1/2" thru 72" (in 1/2" incements).
- MUST Specify Shaker, Fluted or Reeded Facades; see section 3 for facade options.
- Specify Finished End Panels Left, Right or Both. (L/R/B).
- Equal openings.

Order#
DDU57_____
DDU60_____
DDU63_____
DDU66_____
DDU69_____
DDU72_____
(Specify Width)

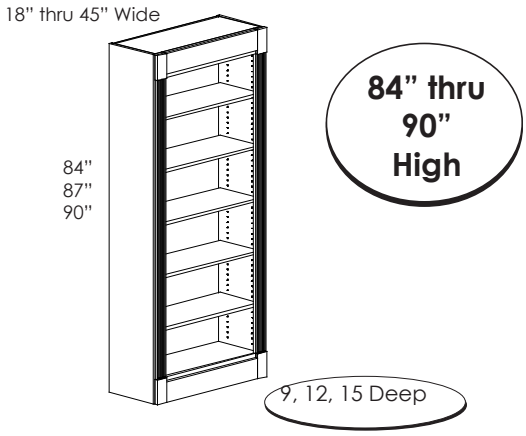

Decortative Tall Bookcase

- 5 Adjustable shelves
- Widths available 18" thru 45" (in 1/2" incements).
- MUST Specify Shaker, Fluted or Reeded Facades; see section 3 for facade options.
- Specify Finished End Panels Left, Right or Both. (L/R/B).

Order#
DT84_____
DT87_____
DT90_____
(Specify Width)

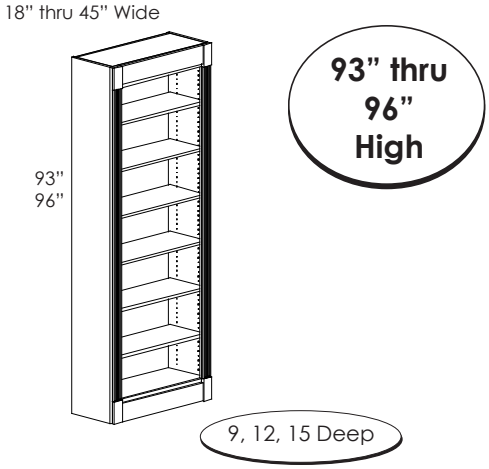

Decortative Tall Bookcase

- 6 Adjustable shelves
- Widths available 18" thru 45" (in 1/2" incements).
- MUST Specify Shaker, Fluted or Reeded Facades; see section 3 for facade options.
- Specify Finished End Panels Left, Right or Both. (L/R/B).

Order#
DT93_____
DT96_____
(Specify Width)

Section 10 -Arched Bookcase Uppers

36" thru 42" Wide

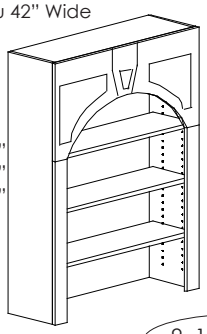

48"
51"
54"

48" thru 54" High

9, 12, 15 Deep

Arched Uppers

- 36" and 42" wide ONLY
- 3 Adjustable shelves
- MUST Specify Shaker, Fluted or Reeded Facades; see section 3 for facade options.
- Specify Finished End Panels Left, Right or Both. (L/R/B).

Order#
ABU48_____
RBU51_____
RBU54_____
(Specify Width)

36" thru 42" Wide

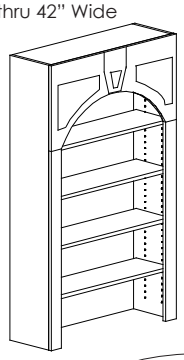

57"
60"
63"
66"
68"
72"

57" thru 72" High

9, 12, 15 Deep

Arched Uppers

- 36" and 42" wide ONLY
- 4 Adjustable shelves
- MUST Specify Shaker, Fluted or Reeded Facades; see section 3 for facade options.
- Specify Finished End Panels Left, Right or Both. (L/R/B).

Order#
RBU57_____
RBU60_____
RBU63_____
RBU66_____
RBU69_____
RBU72_____
(Specify Width)

Section 11 -Arched Bookcase Tall

36" thru 42" Wide

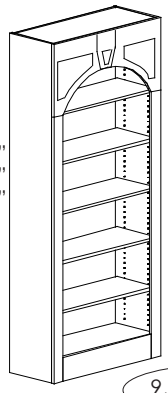

84"
87"
90"

84" thru 90" High

9, 12, 15 Deep

Arched Tall

- 36" and 42" wide ONLY
- 5 Adjustable shelves
- MUST Specify Shaker, Fluted or Reeded Facades; see section 3 for facade options.
- Specify Finished End Panels Left, Right or Both. (L/R/B).

Order#
AT84_____
AT87_____
AT90_____
(Specify Width)

36" thru 42" Wide

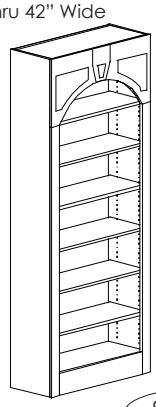

93"
96"

93" thru 96" High

9, 12, 15 Deep

Arched Tall

- 36" and 42" wide ONLY
- 6 Adjustable shelves
- MUST Specify Shaker, Fluted or Reeded Facades; see section 3 for facade options.
- Specify Finished End Panels Left, Right or Both. (L/R/B).

Order#
AT93_____
AT96_____
(Specify Width)

Section 12 -Raised Panel Header Bookcase Uppers

36" thru 42" Wide

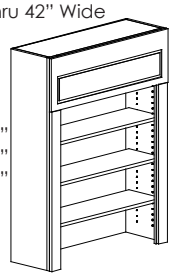

48"
51"
54"

9, 12, 15 Deep

Raised Panel Header Uppers

- 36" and 42" wide ONLY
- 2 Adjustable shelves
- MUST Specify Shaker, Fluted or Reeded Facades
- Specify Finished End Panels Left, Right or Both. (L/R/B).

Order#
RPHU48_____
RPHU51_____
RPHU54_____
(Specify Width)

36" thru 42" Wide

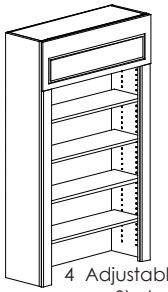

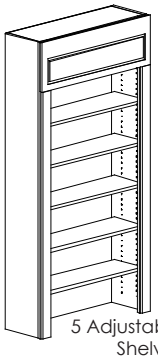

57"
60"
63"
66"
68"
72"

4 Adjustable Shelves

5 Adjustable Shelves

9, 12, 15 Deep

Raised Panel Header Uppers

- 36" and 42" wide ONLY
- MUST Specify Shaker, Fluted or Reeded Facades
- Specify Finished End Panels Left, Right or Both. (L/R/B).

Order#
RPHU57_____
RPHU60_____
RPHU63_____
RPHU66_____
RPHU69_____
RPHU72_____
(Specify Width)

Section 13 - Raised Panel Header Tall

36" thru 42" Wide

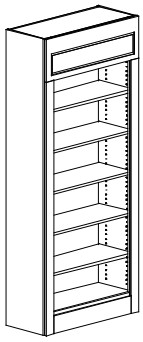

84"
87"
90"

9, 12, 15 Deep

Raised Panel Header Tall

- 36" and 42" wide ONLY
- 5 Adjustable shelves
- MUST Specify Shaker, Fluted or Reeded Facades
- Specify Finished End Panels Left, Right or Both. (L/R/B).

Order#
RPHT84_____
RPHT87_____
RPHT90_____
(Specify Width)

18" thur 45" Wide

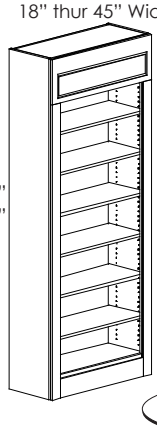

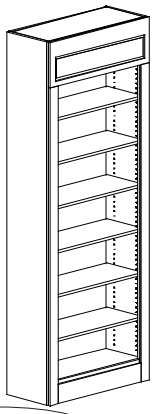

93"
96"

9, 12, 15 Deep

Raised Panel Header Tall

- 36" and 42" wide ONLY
- 6 Adjustable shelves
- Widths available 18" thru 42" (in 1/2" incements).
- MUST Specify Shaker, Fluted or Reeded Facades
- Specify Finished End Panels Left, Right or Both. (L/R/B).

Order#
RPHT93_____
RPHT96_____
(Specify Width)

(757) 421-DAVE (3283)

Section 14 -Quarter Round Bookcase Uppers

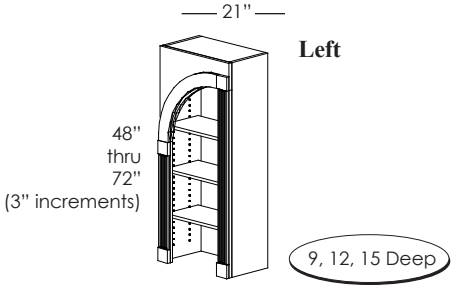

Quarter Round Left Uppers

- Widths available 21".
- 48" thru 51" 2 adjustable shelves
  54" thru 63" 3 adjustable shelves
  66" thru 72" 4 adjustable shelves
- MUST Specify Shaker, Fluted or Reeded Facades
- Specify Finished End Panels Left, Right or Both. (L/R/B).

Order#
QRLU4821
QRLU5121
QRLU5421
QRLU5721
QRLU6021
QRLU6321
QRLU6621
QRLU6921
QRLU7221

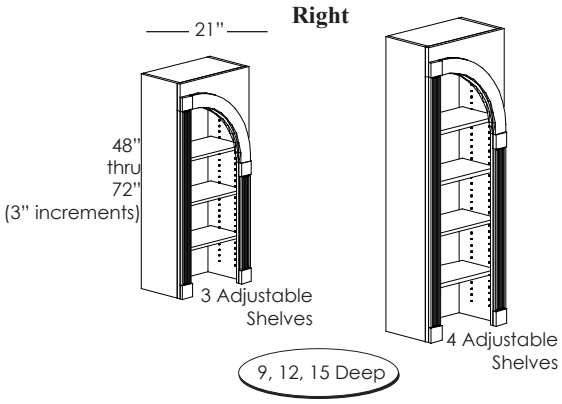

Quarter Round Right Uppers

- Widths available 21".
- 48" & 51" 2 adjustable shelves
  54" & 63" 3 adjustable shelves
  66" & 72" 4 adjustable shelves
- MUST Specify Shaker, Fluted or Reeded Facades
- Specify Finished End Panels Left, Right or Both. (L/R/B).

Order#
QRRU4821
QRRU5121
QRRU5421
QRRU5721
QRRU6021
QRRU6321
QRRU6621
QRRU6921
QRRU7221

Section 15 Quarter Round Tall

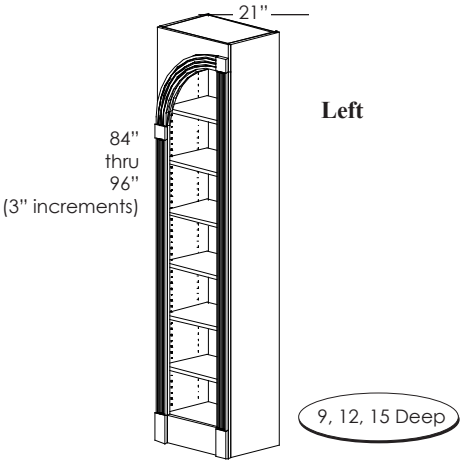

Quarter Round Left Tall

- Widths available 21".
- 84", 87" & 90" 4 adjustable shelves
  93" & 96" 5 adjustable shelves
- MUST Specify Shaker, Fluted or Reeded Facades
- Specify Finished End Panels Left, Right or Both. (L/R/B).

Order#
QRLT8421
QRLT8721
QRLT9021
QRLT9321
QRLT9621

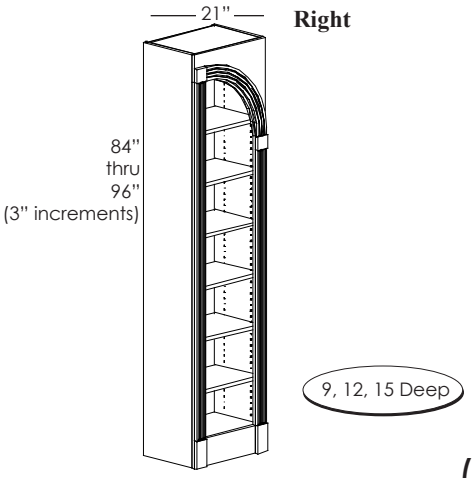

Quarter Round Right Tall

- Widths available 21".
- 84", 87" & 90" 4 adjustable shelves
  93" & 96" 5 adjustable shelves
- MUST Specify Shaker, Fluted or Reeded Facades
- Specify Finished End Panels Left, Right or Both. (L/R/B).

Order#
QRRT8421
QRRT8721
QRRT9021
QRRT9321
QRRT9621

SHOWTIME
Bookcase & Theater Cabinets

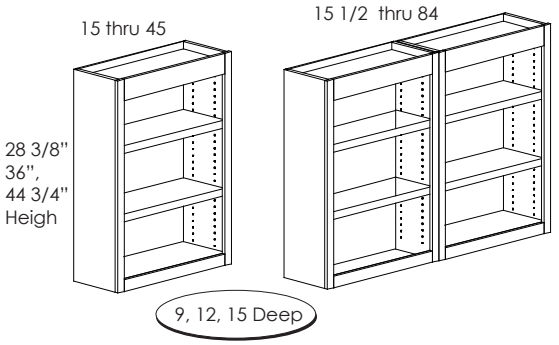

Beaded Open Wall Cabinet

- Widths available 15" thru 45" (in 1/2" incements).
- Open Cabinets are available with optional beaded backs.
- Equal openings.
- 6" Top rail
- 2 1/4 Bottom Rail

Order#
SOW28 3/8_____
SOW36_____
SOW44 3/4_____
(Specify Width)

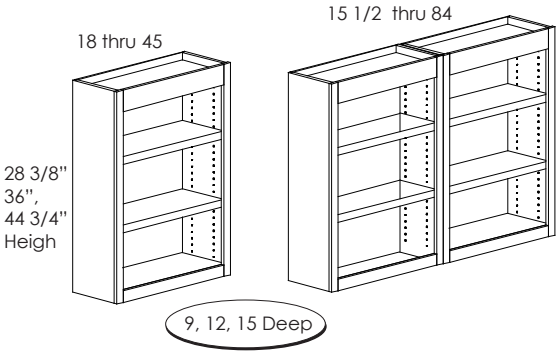

Decorative Open Wall Cabinet

- Widths available 18" thru 45" (in 1/2" incements).
- Open Cabinets are available with optional beaded backs.
- Equal openings.
- 6" Top rail
- 2 1/4 Bottom Rail

Order#
DOW28 3/8_____
DOW36_____
DOW44 3/4_____
(Specify Width)

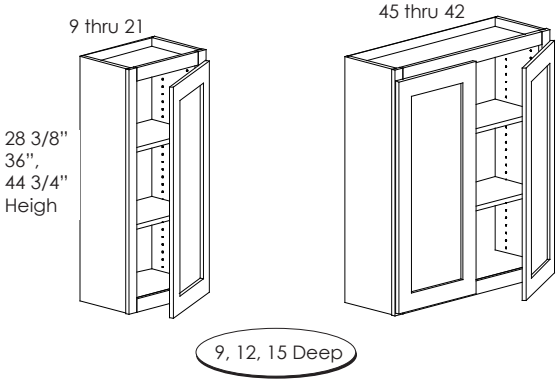

Single and Double Door Solid Wall Cabinet

- Available in 3 Height of:
  28 3/8",36",44 3/4"
- Single door cabinets available in widths of:
  13 1/2",15", 16" 1/2", 18" 19 1/2", 21"
- Double door cabinets available in Widths of:
  25 1/2",28 1/2", 31 1/2", 34 1/2", 37 1/2", 40 1/2", 43 1/2"
- Specify Left or Right Hinge on single door cabinets. (L/R)
- Specify Finished Ends: Left, Right or Both. (L/R/B)
- 5" Top rail exposed.
- 3/4" Bottom rail exposed.

Order#
SDW 9 thru 21

SGRDW 9 thru 21

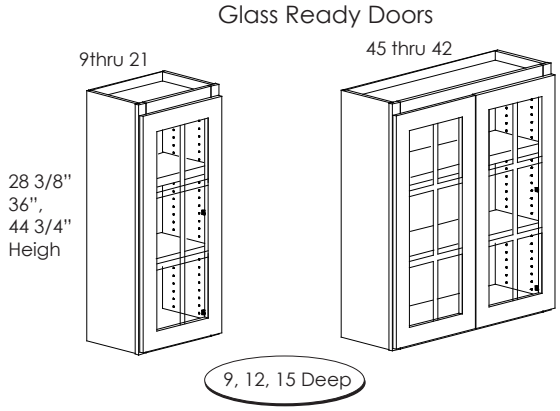

Single and Double Glass Ready Wall Cabinet

- Available in 3 Height of:
  28 3/8",36",44 3/4"
- Single door cabinets available in widths of:
  13 1/2",15", 16" 1/2", 18" 19 1/2", 21"
- Double door cabinets available in Widths of:
  25 1/2",28 1/2", 31 1/2", 34 1/2", 37 1/2", 40 1/2", 43 1/2"
- 5" Top rail exposed.
- 3/4" Bottom rail exposed.

Order#
DDW 24 thru421

DGRDW 24 thru 42

(757) 4 2 1 - D A V E (3283)

Mantle Shelfs

Wood

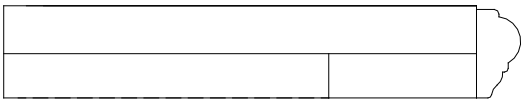

Wood with Stone Cap

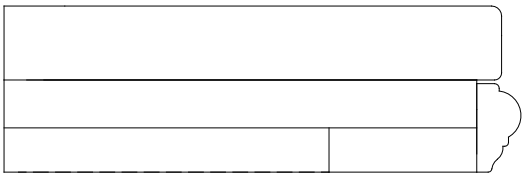

Corbels

Basic Corbel

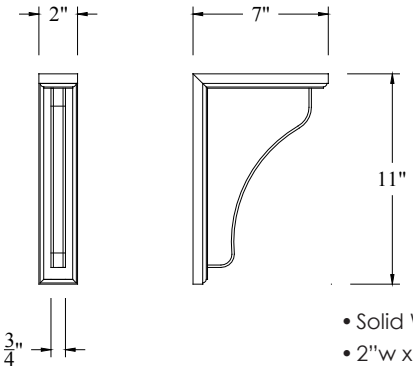

Order#
DEC-CORBEL-BASIC

- Solid Wood.
- 2"w x 7"d x 11"h
- Specify color on order form.

Carved Corbel (LARGE)

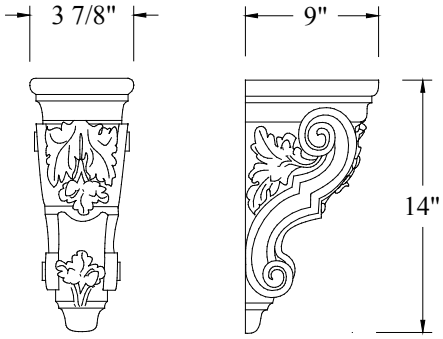

- Solid Wood.
- 3 7/8"w x 9"d x 14"h
- Specify color on order form.

Order#

DEC-CARVEDCORBEL-LARGE

Carved Corbel (Small)

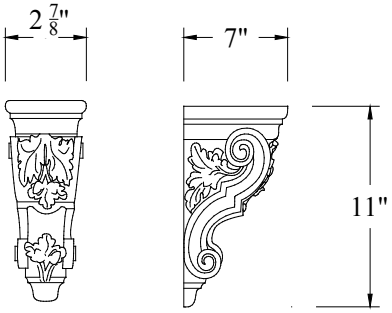

Order#
DEC-CARVEDCORBEL-SMALL

- Solid Wood.
- 2 7/8"w x 7"d x 11"h
- Specify color on order form.

1 Panel

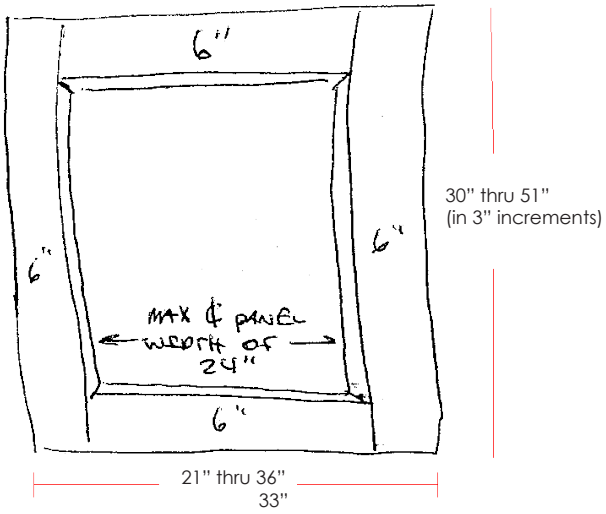
6"
6"
6"
6"
MAX ¢ PANEL WIDTH OF 24"
30" thru 51"
(in 3" increments)
21" thru 36"
33"

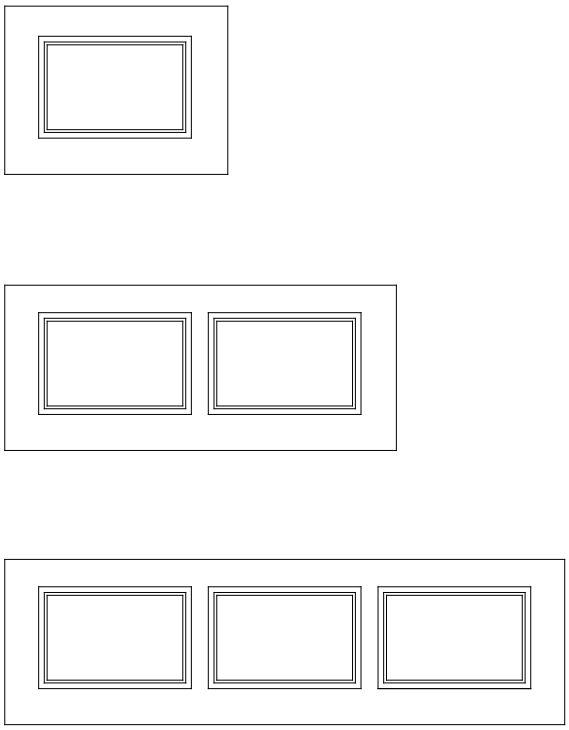

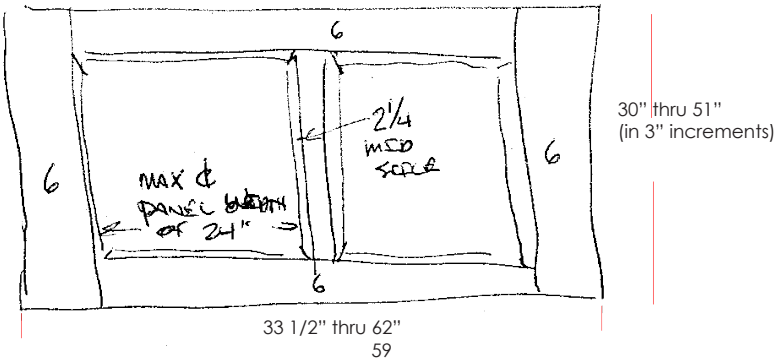
6
6
6
6
2¼
MID SCALE
MAX ¢ PANEL WIDTH OF 24"
30" thru 51"
(in 3" increments)
33 1/2" thru 62"
59

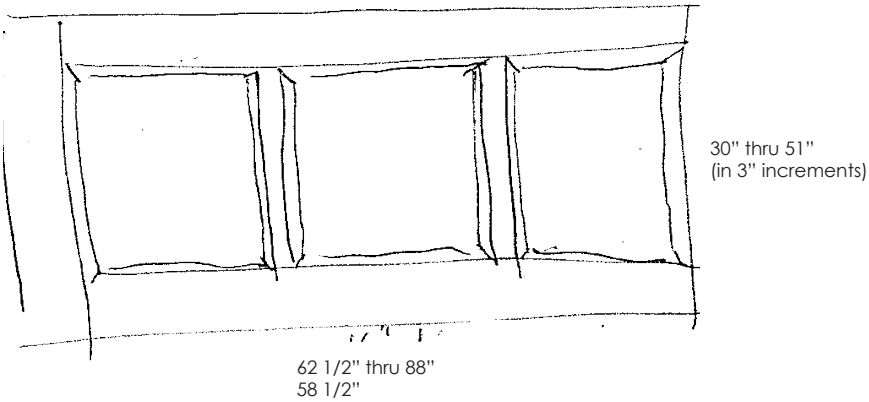
30" thru 51"
(in 3" increments)
62 1/2" thru 88"
58 1/2"

Fluted

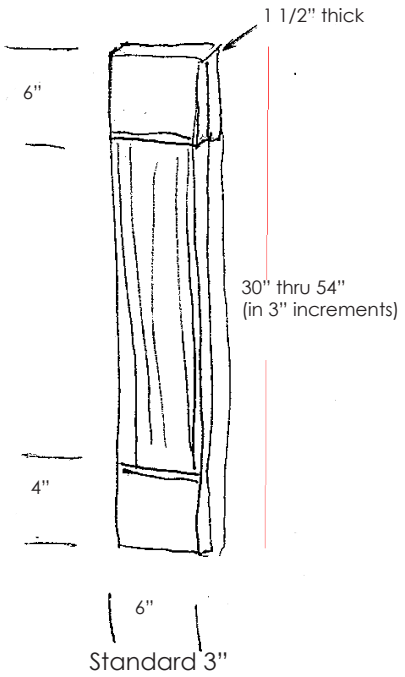
1 1/2" thick
6"
30" thru 54"
(in 3" increments)
4"
6"
Standard 3"

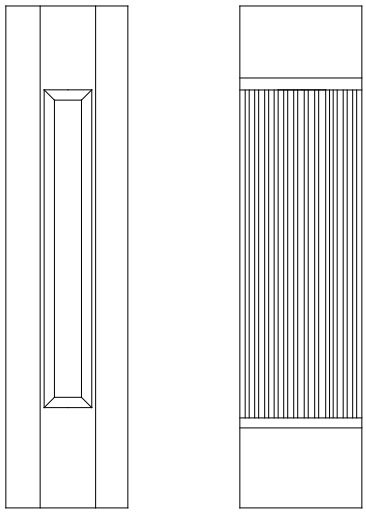

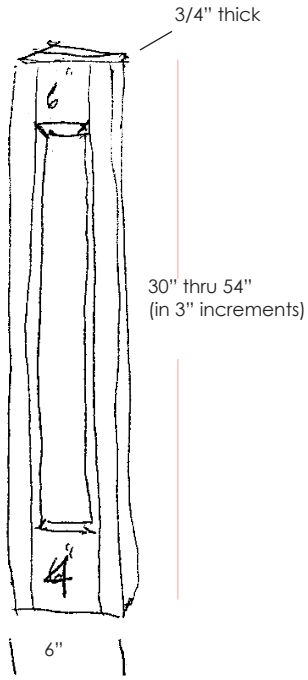
3/4" thick
6
30" thru 54"
(in 3" increments)
4
6"

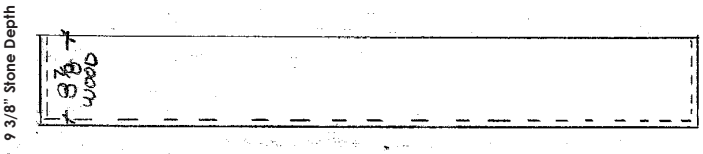
9 3/8" Stone Depth
3 7/8" WOOD

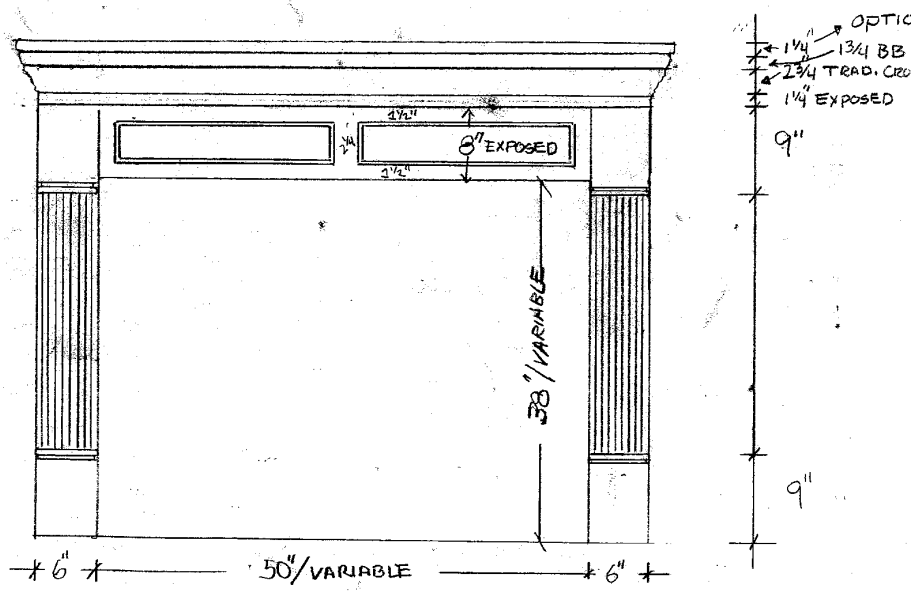
OPTIC
1 1/4"
1 3/4 BB
2 3/4 TRAD. CRO
1 1/4" EXPOSED
9"
9"
4 1/2"
8" EXPOSED
4 1/2"
38"/VARIABLE
6"
50"/VARIABLE
6"

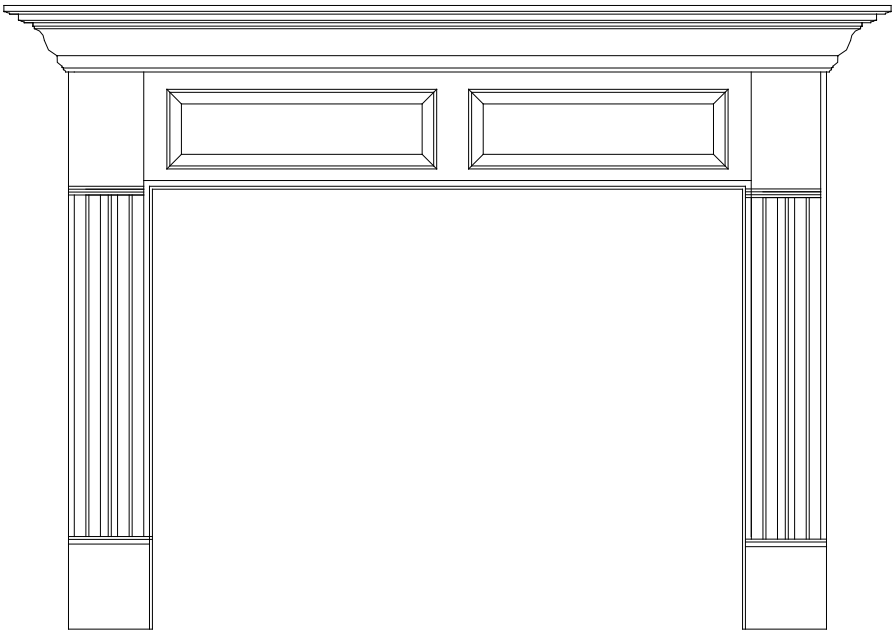

*NOTE: Beaded Frames

* All doors ca be preped for speaker mesh/grill.